Wilbur Davis Studios

Lamping
120V - E26 Base, 60W Max

Bulb Included
9W 60W Equivalent LED
A19
800 Lumen Output
2700K (soft white)
E26 Base / Dimmable / 120 Volt

Materials
Steel or Brass Canopy
Hardwood
Glass

Weight
4.5 lbs

Wood Options
Walnut, Cherry, Mahogany, Maple
White Oak, White Ash

Metal Options
White, Black, Chrome, Brushed Nickel, Brass

Fits all standard junction boxes.
UL Certified for Dry environment only.

Prairie Pendant Light
Wilbur Davis Studios
info@wilburdavisstudios.com
617-710-8783

SCALE: 1:2 | SHEET 1 OF 2

Wilbur Davis Studios

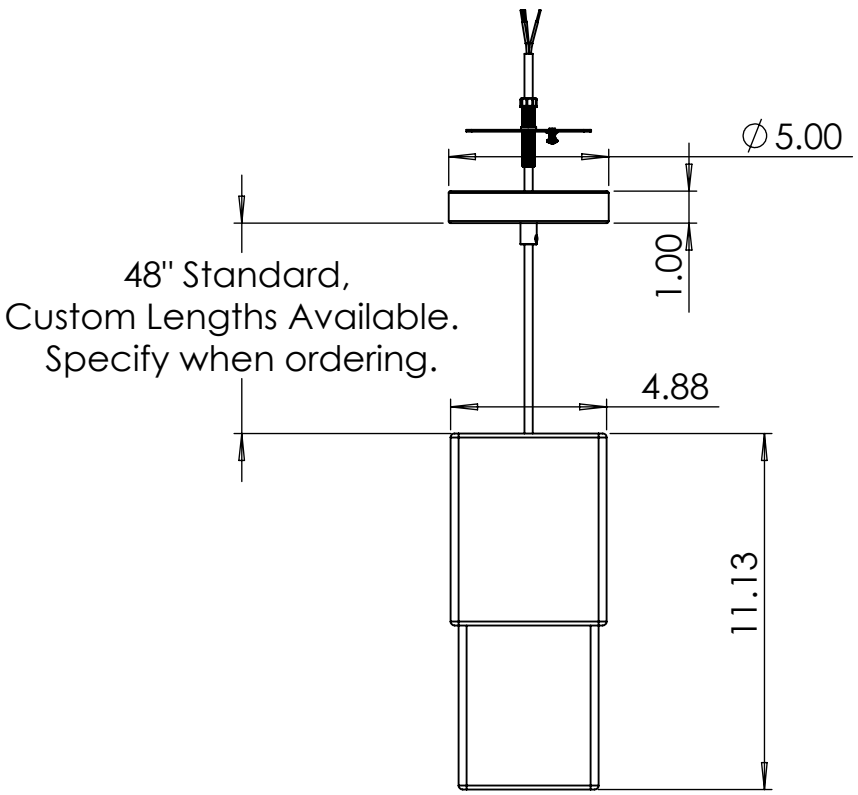

Lamping
120V - E26 Base, 60W Max

Bulb Included
9W 60W Equivalent LED
A19
800 Lumen Output
2700K (soft white)
E26 Base / Dimmable / 120 Volt

Materials
Steel or Brass Canopy
Hardwood
Glass

Weight
4.5 lbs

Wood Options
Walnut, Cherry, Mahogany, Maple
White Oak, White Ash

Metal Options
White, Black, Chrome, Brushed Nickel, Brass

Fits all standard junction boxes.
UL Certified for Dry environment only.

Prairie Pendant Light
Wilbur Davis Studios
info@wilburdavisstudios.com
617-710-8783

SCALE: 1:6 | SHEET 2 OF 2